Positioning system DSB 200

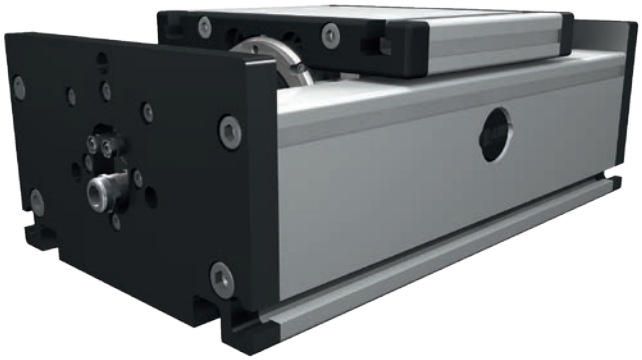

Function:
The guide body consists of an aluminium square profile with two rail guides integrated into it, with four, six or eight runner blocks depending on the load and carriage type. The DSB linear motor axis is a highly dynamic short stroke unit, which is based on the principle of a linear three-phase synchronous motor. The secondary part is equipped with permanent magnets and serves as rotor. The primary part as stator has a three-phase winding. The symmetrical design of the motor results in a neutralisation of the magnetic attraction between stator and rotor and thus enables an optimum relief of the bearing. Combined with the elimination of moved cables, this results in an excellent lifetime of the axis. With a max. cooling capacity requirement of 0.5 – 1.0 l of water per minute (depending on the motor size), the temperature will rise by a max. of 10 degrees Kelvin.

Fitting position: As required
Carriage mounting: By T-slots.
Unit mounting: By T-slots and mounting sets. The linear axis can be combined with any T-slot profile.
Carriage support: In the standard version, the carriage runs on 4 runner blocks which can be serviced at a central servicing position. For longer carriages the number of runner blocks can be increased.
Repeatability ± 0,05mm mm. Repeated accuracy max. ± 0,05mm

Forces and torques

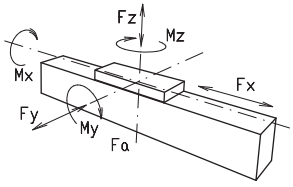

F_z = external force by load
F_a = magnetic attraction force
F_{zm} = maximum force in consideration of motor power
$F_{zm} = F_z + F_a$

Size	200			
Motor size	1	2	3	4
permitted dyn.Forces*	5000 km / 10000 km			
F_a (N)	10000 / 8000			
F_{zm} (N)	15600 / 11080			
F_z (N)	20600 / 14600			
M_x (Nm)	1285 / 815			
M_y (Nm)	1375 / 980			
M_z (Nm)	1345 / 960			
C (N)	22800			
Number of runner blocks	4	4	4	4
All forces and torques related to the following: existing values / table values $\frac{Fy}{Fy_{dyn}} + \frac{Fzm}{Fzm_{dyn}} + \frac{Mx}{Mx_{dyn}} + \frac{My}{My_{dyn}} + \frac{Mz}{Mz_{dyn}} \leq 1{,}5$				
Motor specifications Fx				
Motor size	1	2	3	4
Carriage weight (kg)	4,66	5,06	5,46	5,86
Weight primary part (kg)	4,4	4,9	4,9	4,9
permanent force without Watercooling (N)	121	152	182	212
permanent force with Watercooling (N)	561	700	839	978
Max force (N) 1s	868	1086	1303	1520
Moving force without current				
N	2,2	2,5	2,8	3,1
Geometrical moments of inertia of aluminium profile				
I_x mm⁴	4,81 x10⁶			
I_y mm⁴	26,0 x10⁶			
Elastic modulus N/mm²	70000			

* referred to lifetime

Formula: DSB

Deflection:

$$f = \frac{F*L^3}{E*I*192}$$

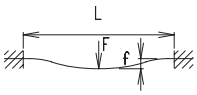

f = deflection (mm)
F = load (N)
L = free length (mm)
E = elastic modulus 70000 (N/mm²)
I = second moment of area (mm⁴)

Nominal lifetime:

$$L = \left(\frac{C}{F}\right)^3 \times 10^5$$

C = dynamic load faktor (N)
F = middle load (N)

Positioning system DSB 200

Dimensions (mm)

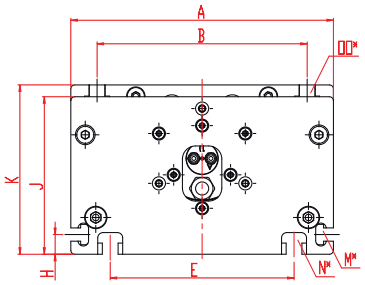

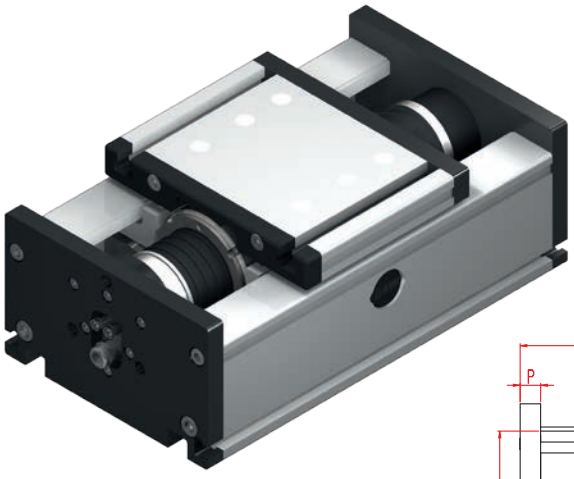

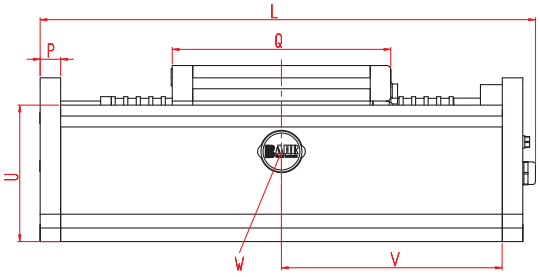

*For slide nuts refer to main catalog chapter 2.2 page 2 V = 162 mm W = servicing position

Size ❒	Basic length L	A	B	E	H	J	K	M for	N for	OO for	P	U	Basic weight Motor size 1/2/3/4
DSB 200	353,5	200	160	140	15	120	129	M 8	M 10	M 10	15	100	18,0 /19,0 /19,4 /19,8 kg

1 **Motor size:**

(1) motor size 1 **(2)** motor size 2 **(3)** motor size 3 **(4)** motor size 4

Basic length, carriage length and stroke												
Size	motor size 1			motor size 2			motor size 3			motor size 4		
	L	Q	Stroke	L	Q	Stroke	L	Q	Stroke	L	Q	Stroke
200	353,5	160	137,5	381	160	137,5	381	160	110	381	160	82,5

For standard carriage length see 'Q' in table.
The carriages can be delivered in any non-standard length upon request; the longer the carriage, the greater the load capacity. For digital controllers and linear encoder refer to chapter 9.1 page 12.

353,5 Basic length

DSB	200	0	0	0	0	0	0	1	353,5
	Pos.	1	2	3	4	5	6	7	

Sample ordering code:
DSB200, motor size 1, 137,5 mm stroke