www.bahr.ru Берг АБ bahr-mail@ya.ru Тел. (495)-228-06-21, (495)-7272272, факс (495 223-30-71

Positioning system DLR 120, 160, 200

Roller unit without drive

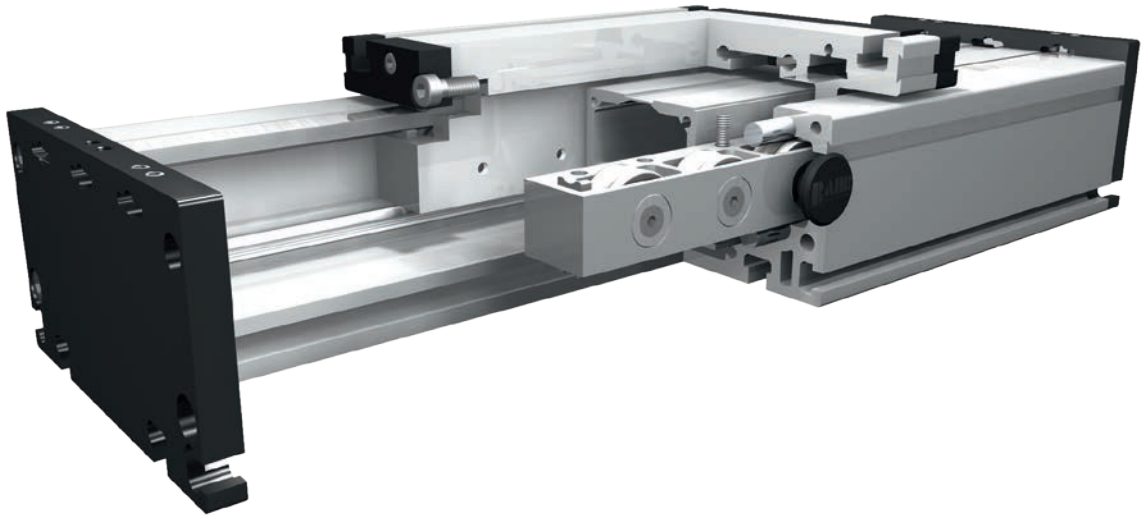

Function:
This unit consists of a rectangular aluminium profile with 2 integrated roller guides. The openings of the guide body are sealed with 3 stainless steel cover bands to protect the guide from splash water and dust. Alternatively, the opening can also be covered with a bellow or can be delivered without cover bands. The roller guide can be either driven by an internal pneumatic cylinder or other additional drives or it serves as load carrying linear slide.

Fitting position: As required. Max. length 6.000 mm without joints.
Carriage mounting: By T-slots.
Unit mounting: By T-slots and mounting sets. The linear axis can be combined with any T-slot profile.
Carriage support: In the standard version, the carriage runs on 8 rollers which can be adjusted and serviced at a central servicing position. For longer carriages the number of rollers can be increased.

Forces and torques

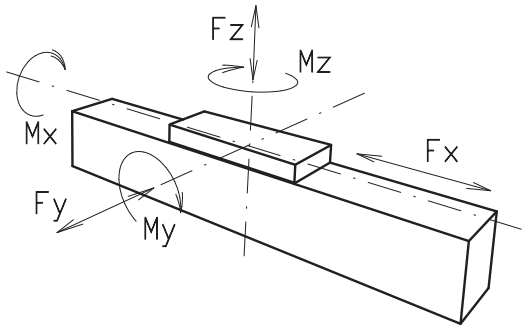

Size	120		160		200	
Forces/Torques	static	dynamic	statisch	dynam.	statisch	dynam.
F_x (N)	-	-	-	-	-	-
F_y (N)	1100	900	3000	2000	4400	3100
F_z (N)	1250	1000	3500	2800	4900	4400
M_x (Nm)	150	125	400	320	600	510
M_y (Nm)	140	120	360	300	560	480
M_z (Nm)	100	90	180	150	310	275

All forces and torques related to the following:
existing values / table values

$$\frac{Fy}{Fy_{dyn}} + \frac{Fz}{Fz_{dyn}} + \frac{Mx}{Mx_{dyn}} + \frac{My}{My_{dyn}} + \frac{Mz}{Mz_{dyn}} \leq 1$$

Speed			
(m/s) max	4	6	8
Geometrical moments of inertia of aluminium profile			
I_x mm^4	6,6x10^5	22,2x10^5	63,8x10^5
I_y mm^4	38,6x10^5	122,0x10^5	335,0x10^5
Elastic modulus N/mm^2	70000	70000	70000

For life-time calculation of rollers use our CD-ROM or homepage!

Formula: DLR

$$f = \frac{F*L^3}{E*I*192}$$

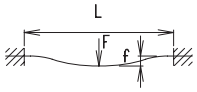

f = deflection	(mm)
F = load	(N)
L = free length	(mm)
E = elastic modulus 70000	(N/mm^2)
I = second moment of area	(mm^4)

Positioning system DLR 120, 160, 200

Dimensions (mm)

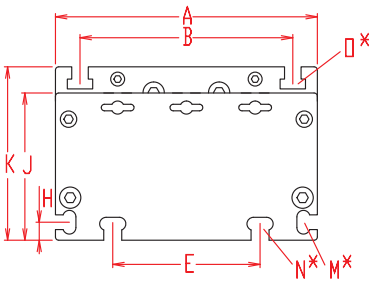

Increasing the carriage length will increase the basic length by the same amount.

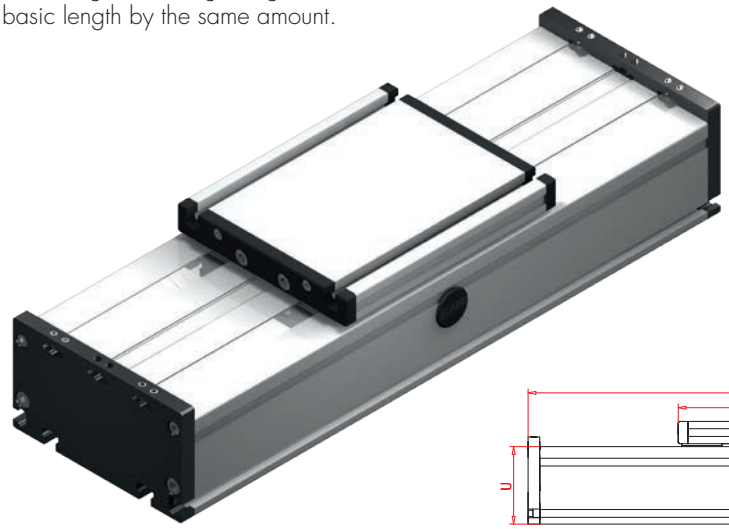

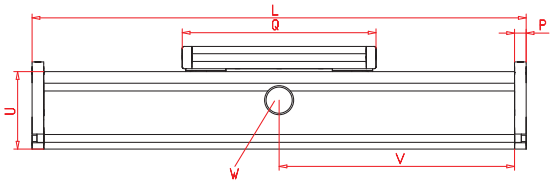

*For slide nuts refer to chapter 2.2 page 2 V = Q + 100 mm W = servicing position

Size	Basic length L	A	B	E	H	J	K	M for	N for	O for	P	Q	U	Basic weight	Weight per 100 mm
DLR 120	200	120	96	78	10	68	79	M 5	M 6	M 6	10	156	60	3,2 kg	0,71 kg
DLR 160	240	160	130	90	11	90	106	M 6	M 8	M 8	12	200	80	6,9 kg	1,42 kg
DLR 200	320	200	160	140	15	110	129	M 8	M 10	M 10	15	270	100	11,4 kg	2,30 kg

7.1

0 Choice of guide body profile:

(0)

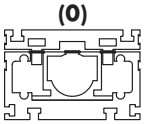

internal profile with cover bands

(1)

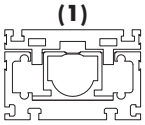

internal profile without cover bands

(2)

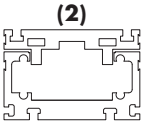

without internal profile and cover bands

(3)

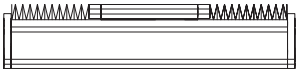

with bellows

Stainless versions upon request.

0 Choice of carriages:

(0)

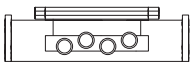

(2)

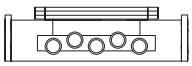

(3)

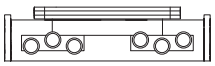

Size	Version 0		Version 2		Version 3	
	Q	L	Q	L	Q	L
120	156	200	196	240	>236	>280
160	200	240	250	290	>300	>340
200	270	320	330	380	>410	>470

1500 Basic length + stroke = total length

DLR	160	0	0	0	0	0	0	0	01500
	Pos.	1	2	3	4	5	6	7	

Sample ordering code:
DLR160, with internal profile and cover bands, standard rollers, 1260 mm stroke.